Nayati
Total Food-Service Solutions

ITEM#

MODEL#

NAME#

S/N#

Modular Gas Table Range
NGTR 12-90 GR, Gas Prime Cooker with Six Burners and Open Cabinet

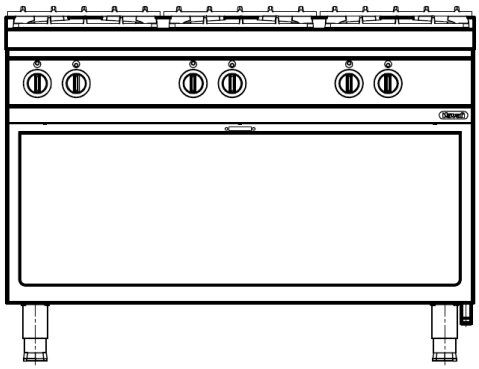

Grandis Modular Gas Table Range

Gas Prime Cooker with Six Burners and Open Cabinet

NGTR 12-90 GR

SIX GAS BURNERS, FLAME FAILURE FUNCTION, THERMOCOUPLE, OPEN CABINET

Short Form Specification

Item No.

Nayati Gas Range with 46.5 kW power rate. Unit to be installed on open cabinet or similar elements, cantilever, or solid block solutions. Heavy-duty cast iron pan support included. Featuring removable clip joint to connect Grandis family product.

Main Features

- Durable Cast Iron pot holder.
- H2 Cabinet Finishing.
- Optional 6 x 10 kW Burner Power.
- Unit to be installed free standing, can be joined with base cabinet, table stand or cantilever system.
- Service maintenance can be done from the front panel.

Construction

- All exterior panels in 304 type of Stainless Steel
- Orbital top panel anti-scratch finishing.
- Top and side are mounted by 2.0 mm of Stainless Steel.
- Adjustable ±25 mm Stainless Steel leg.
- Certified IPX4 protection.

Included Accessories

- Extra Nozzle (Main Burner & Pilot Burner).

Optional Accessories

- Clip Plate for Joining.

APPROVAL:

Modular Gas Table Range
NGTR 12-90 GR, Gas Prime Cooker
with Six Burners and Open Cabinet

Modular Gas Table Range
NGTR 12-90 GR, Gas Prime Cooker
with Six Burners and Open Cabinet

Front

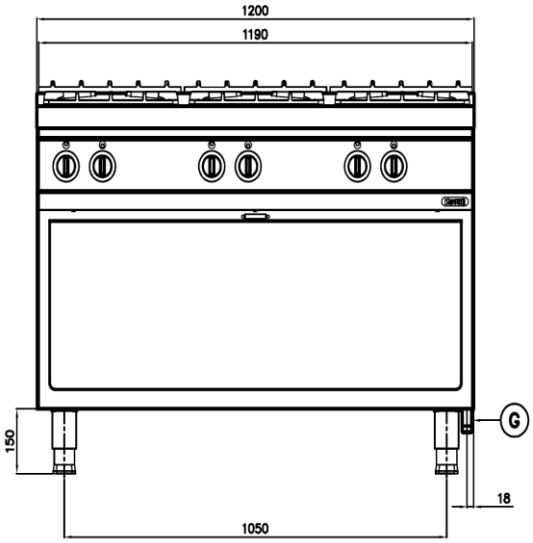

Top

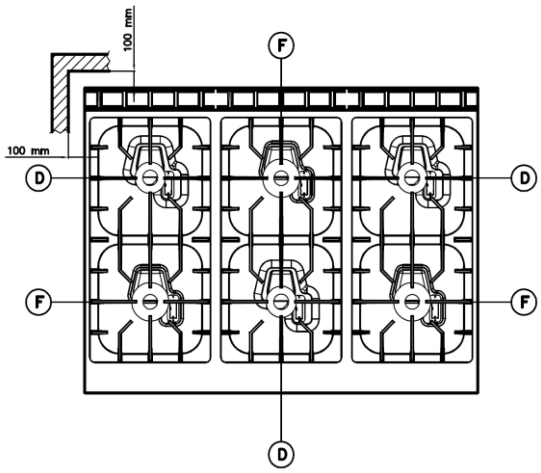

Side

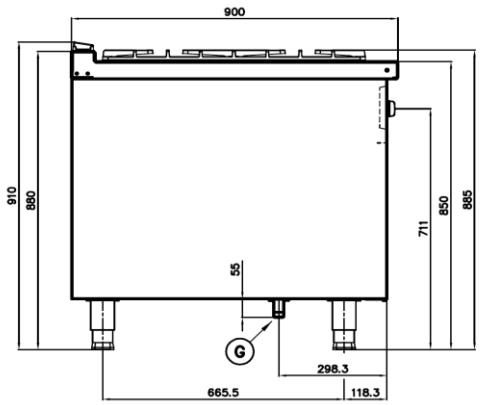

G Gas Connection R 3/4"

F Open Burner 10 kW

D Open Burner 5.5 kW

* Overall Dimension in mm

Gas

Gas Power:	46.5 kW
Gas Type Option:	G30/G31, G20
Gas Inlet:	R ¾"
Natural Gas–Pressure:	G20: 20mbar
LPG Gas Pressure:	G30/G31: 28-30mbar/37mbar

Key Information:

Cooking Surface Width:	3x(370x725)
Direct heat emission:	11.63 kW
Latent heat emission:	4.65 kW
Steam emission:	6.84 kg /h
Working Temperature MIN:	-
Working Temperature MAX:	-
Max Size Pan:	d:40 cm
Net Weight:	150 Kg
Shipping Height:	1020 mm
Shipping Width:	1255 mm
Shipping Depth:	995 mm
Shipping Volume:	1.274 m³